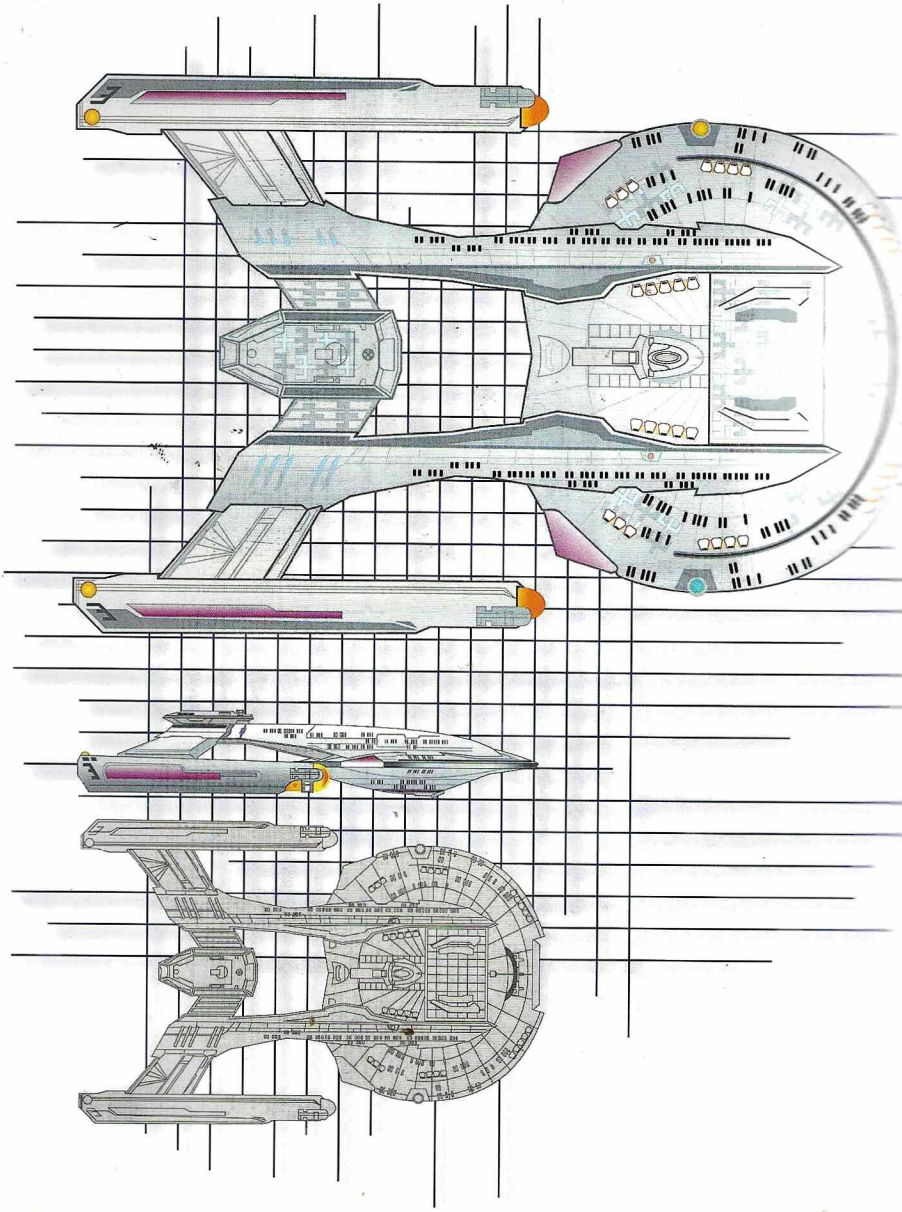

AKIRA–CLASS STARSHIP

CLASS AND TYPE: *AKIRA*–CLASS HEAVY CRUISER
COMMISSIONING DATE: 2368
HULL CHARACTERISTICS
SIZE: 7 (465 METERS LONG, 26 DECKS)
RESISTANCE: 5
STRUCTURAL POINTS: 140

OPERATIONS CHARACTERISTICS
CREW/PASSENGERS/EVAC: 500/1750/4500
[6 PWR/ROUND]
COMPUTERS: 5
[5 PWR/ROUND]
TRANSPORTERS: 4 PERSONNEL, 4 CARGO, 4 EMERGENCY
[6 PWR/ROUND]
TRACTOR BEAMS: 1 AD, 1 FD, 1 FV
[2/RATING USED]

PROPULSION AND POWER CHARACTERISTICS
WARP SYSTEM: 6.0/9.4/9.8 (12 HOURS)
[2/WARP FACTOR]
IMPULSE SYSTEM: .75c/.95c
[7/9 PWR/ROUND]
POWER: 190

SENSOR SYSTEMS
LONG-RANGE SENSORS: +2/17 LIGHT-YEARS
[6 PWR/ROUND]
LATERAL SENSORS: +2/1 LIGHT-YEAR
[4 PWR/ROUND]
NAVIGATIONAL SENSORS: +2
[5 PWR/ROUND]
SENSORS SKILL: 5

WEAPONS SYSTEMS
TYPE X PHASER
RANGE: 10/30,000/100,000/300,000
ARC: ALL (720 DEGREES)
ACCURACY: 4/5/7/10
DAMAGE: 20
POWER: [20]

TYPE II PHOTON TORPEDOES
NUMBER: 275
LAUNCHERS: 1 AD, 1 FV
SPREAD: 10
ARC: FORWARD OR AFT, BUT ARE SELF-GUIDED
RANGE: 15/300,000/1,000,000/3,500,000
ACCURACY: 4/5/7/10
DAMAGE: 20
POWER: [5]
WEAPONS SKILL: 5

DEFENSIVE SYSTEMS
STARFLEET DEFLECTOR SHIELD
PROTECTION: 60/80
POWER: [60]

DESCRIPTION AND NOTES

FLEET DATA: Starfleet's new *Akira*–class vessels represent the epitome of fast, maneuverable threat-response design. First launched in 2368, the *Akira*–class ships were the first vessels authorized by the Perimeter Defense Directive to enter active service. (Additional ships designed under this classified directive—including the *Norway*, *Steamrunner*, and *Saber*-classes—would enter active duty over the next several years.) Although smaller and lighter than many of the larger *Explorer*–type vessels, these ships boast one of the heaviest armaments ever seen on a Starfleet ship of this size.

Of the twelve new ship classes placed in accelerated development by the PDD, the *Akira*–class Heavy Cruisers remain one of the most versatile. Although primarily designed for active defense duties and long-range perimeter actions, *Akira*–class vessels have proven themselves time and time again on a wide variety of Starfleet missions. In the modern age of Borg incursions, such versatility has become a necessity.

NOTEWORTHY VESSELS/ SERVICE RECORDS/ ENCOUNTERS: *U.S.S. Akira*, prototype; *U.S.S. Black Elk*, lost during routine patrol along Cardassian border; *U.S.S. Nez Perce*, participated in Romulan blockade (2368); *U.S.S. Susquehanna*, engaged the Tholians during the Draconis IX Perimeter Action (2371); *U.S.S. Thunderchild*, participated in defense of Sector 001 during the Borg incursion of 2373. Also in service: *U.S.S. Geronimo*, *U.S.S. Mateo*.

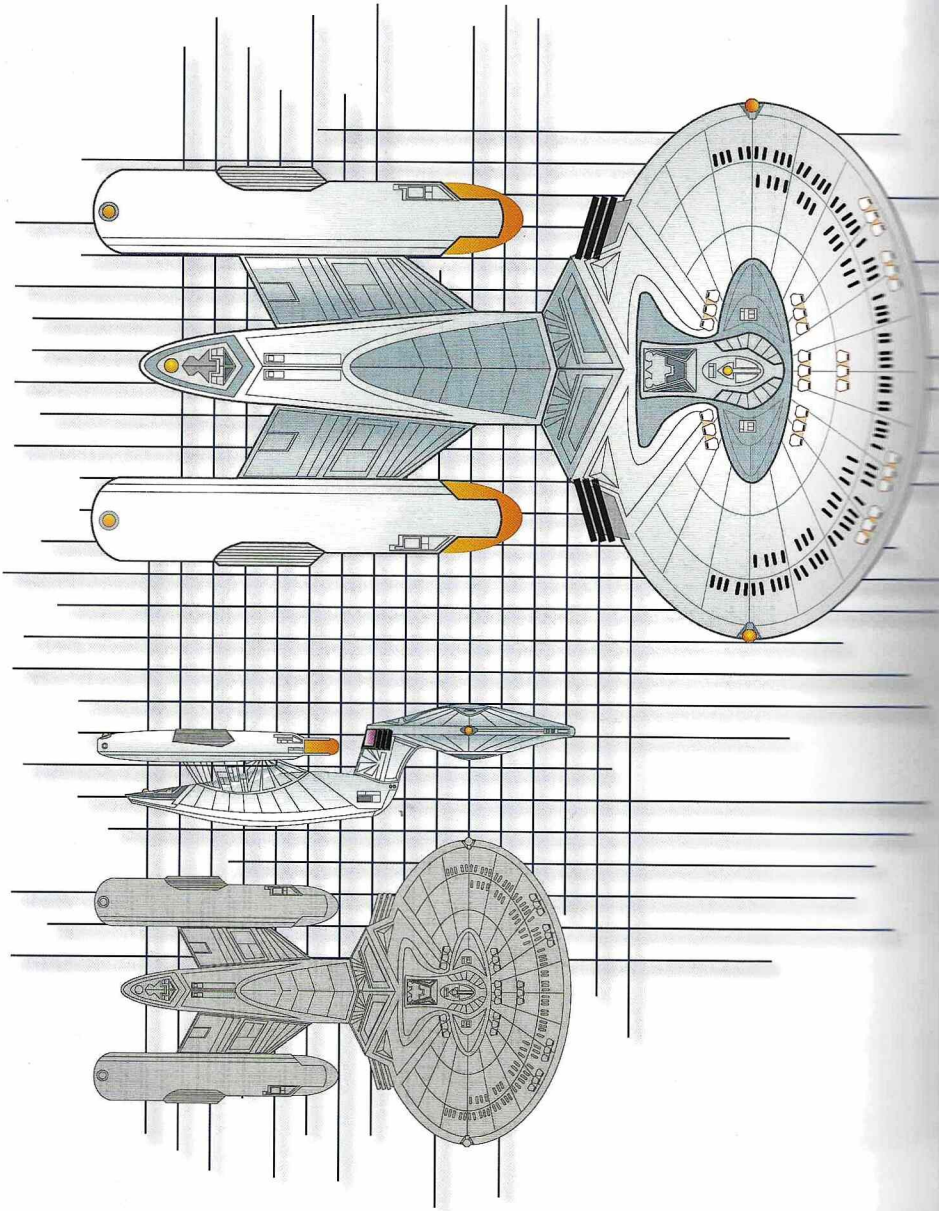

POLLO–CLASS STARSHIP

ASS AND TYPE: *APOLLO*–CLASS LIGHT CRUISER
MMISSIONING DATE: 2325
LL CHARACTERISTICS
SIZE: 5 (315 METERS LONG, 16 DECKS)
RESISTANCE: 3
STRUCTURAL POINTS: 100

ERATIONS CHARACTERISTICS
CREW/PASSENGERS/EVAC: 100/700/2500
[6 PWR/ROUND]
COMPUTERS: 4
[4 PWR/ROUND]
TRANSPORTERS: 4 PERSONNEL, 3 CARGO, 3 EMERGENCY
[5 PWR/ROUND]
TRACTOR BEAMS: 1 AD, 1 FV
[2/RATING USED]

OPULSION AND POWER CHARACTERISTICS
WARP SYSTEM: 6.0/9.2/9.6 (12 HOURS)
[2/WARP FACTOR]
IMPULSE SYSTEM: .75c/.95c
[7/9 PWR/ROUND]
POWER: 160

NSOR SYSTEMS
LONG-RANGE SENSORS: +1/15 LIGHT-YEARS
[6 PWR/ROUND]
LATERAL SENSORS: +1/1 LIGHT-YEAR
[4 PWR/ROUND]
NAVIGATIONAL SENSORS: +2
[5 PWR/ROUND]
SENSORS SKILL: 4

APONS SYSTEMS
TYPE VIII PHASER
RANGE: 10/30,000/100,000/300,000
ARC: ALL (720 DEGREES)
ACCURACY: 5/6/8/11
DAMAGE: 16
POWER: [16]

TYPE II PHOTON TORPEDOES
NUMBER: 150
LAUNCHERS: 1 AD, 1 FV
SPREAD: 4
ARC: FORWARD OR AFT, BUT ARE SELF-GUIDED
RANGE: 15/300,000/1,000,000/3,500,000
ACCURACY: 4/5/7/10
DAMAGE: 20
POWER: [5]
WEAPONS SKILL: 4

DEFENSIVE SYSTEMS
STARFLEET DEFLECTOR SHIELD
PROTECTION: 50/70
POWER: [50]

DESCRIPTION AND NOTES

FLEET DATA: A Starfleet workhorse for nearly fifty years, the *Apollo* class of light cruisers has had one of the most distinguished service careers in the fleet. First launched in 2325, *Apollo*–class cruisers were originally intended to replace the older *Philadelphia*–class vessels of the 23rd century, which reached the end of their production lives in 2312. The *Apollo* vessels were small, quick, and capable of extended mission profiles, thus making them ideal for sector patrol and interdiction duties. In fact, they are still used in this capacity today, and as a class comprise the most common patrol craft encountered in Federation space.

The *Apollo* class remains one of the most reliable spaceframe designs ever to come out of Starfleet's Advanced Technologies division, and many of its concepts can be seen reflected in the newer *Galaxy*–class vessels. As a result of the current threat climate in the UFP—and because of their exemplary maintenance record as a class—many *Apollo*-class vessels are currently being refit into the updated *Hermes*-class of fast cruiser. The *Apollo* class itself ceased production in 2358, when the last vessel was delivered to Starbase 674 from the Utopia Planitia fleet yards.

NOTEWORTHY VESSELS/ SERVICE RECORDS/ ENCOUNTERS: *U.S.S. Apollo*, prototype; *U.S.S. Agamemnon*, a member of Task Force Three during the expected Borg invasion of 2369; *U.S.S. Ajax*, used as test vessel for experimental warp drive upgrade in 2364; *U.S.S. Clement*, assigned to core world patrol duties in late 2360's; *U.S.S. Gage*, lost in the Battle of Wolf 359; *U.S.S. T'Pau*, decommissioned in 2364, later stolen and used to transport Romulan troops during an attempted invasion of Vulcan in 2368. Also in service: *U.S.S. Chronos, U.S.S. McHenry*.

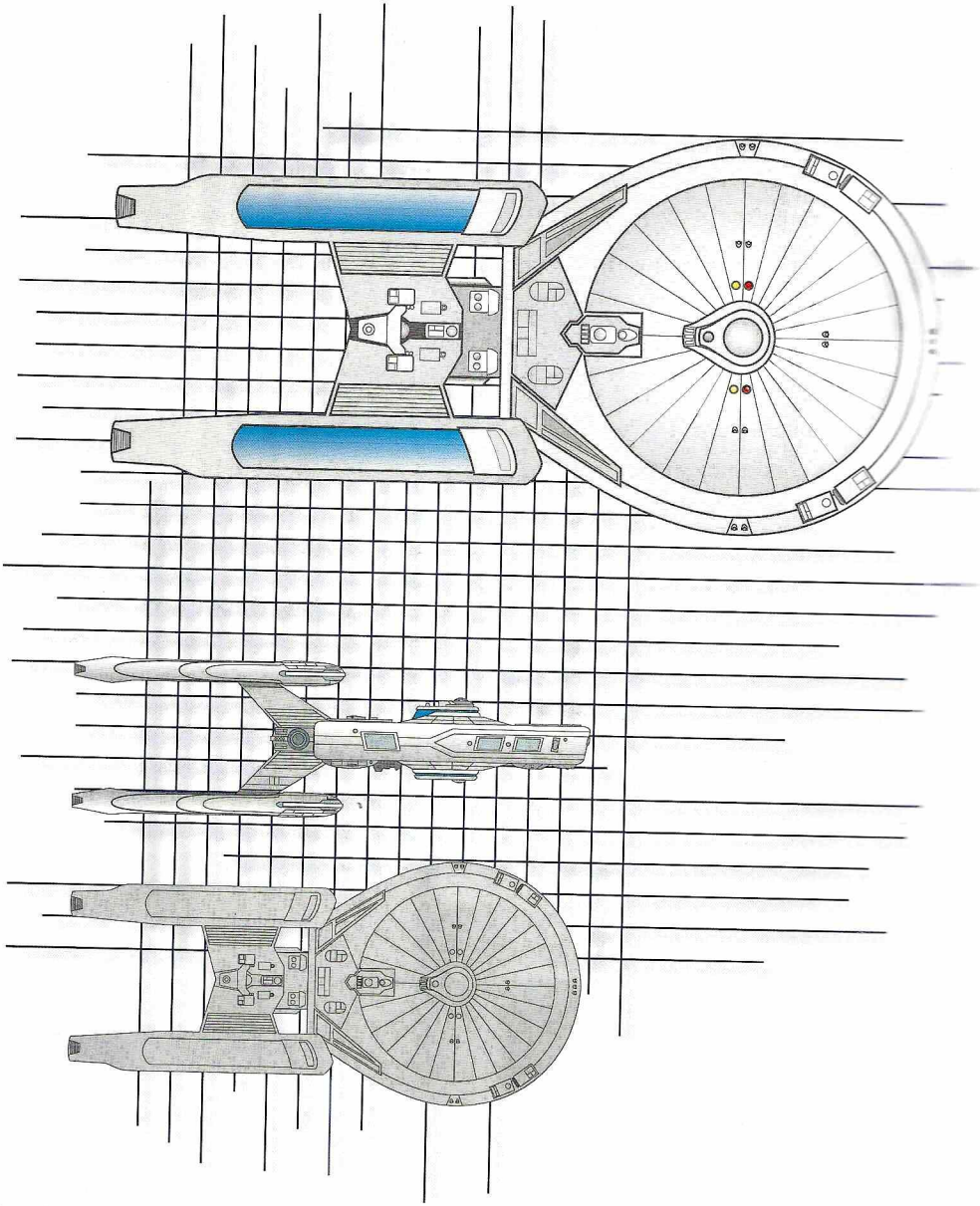

CONSTELLATION–CLASS STARSHIP

CLASS AND TYPE: *CONSTELLATION*–CLASS EXPLORATORY CRUISER

COMMISSIONING DATE: 2304

HULL CHARACTERISTICS

SIZE: 5 (302 METERS LONG, 17 DECKS)

RESISTANCE: 3

STRUCTURAL POINTS: 100

OPERATIONS CHARACTERISTICS

CREW/PASSENGERS/EVAC: 350/1500/3500
[6 PWR/ROUND]

COMPUTERS: 4
[4 PWR/ROUND]

TRANSPORTERS: 4 PERSONNEL, 4 CARGO, 4 EMERGENCY
[6 PWR/ROUND]

TRACTOR BEAMS: 1 AD, 1 FV
[2/RATING USED]

PROPULSION AND POWER CHARACTERISTICS

WARP SYSTEM: 5.3/9.0/9.2 (8 HOURS)
[2/WARP FACTOR]

IMPULSE SYSTEM: .75c/.9c
[7/9 PWR/ROUND]

POWER: 150

SENSOR SYSTEMS

LONG-RANGE SENSORS: +2/15 LIGHT-YEARS
[6 PWR/ROUND]

LATERAL SENSORS: +1/1 LIGHT-YEAR
[4 PWR/ROUND]

NAVIGATIONAL SENSORS: +1
[5 PWR/ROUND]

SENSORS SKILL: 4

WEAPONS SYSTEMS

TYPE VIII PHASER

RANGE: 10/30,000/100,000/300,000

ARC: ALL (720 DEGREES)

ACCURACY: 5/6/8/11

DAMAGE: 16

POWER: [16]

TYPE II PHOTON TORPEDOES

NUMBER: 160

LAUNCHERS: 1 AD, 1 FV,

SPREAD: 5

ARC: FORWARD OR AFT, BUT ARE SELF-GUIDED

RANGE: 15/300,000/1,000,000/3,500,000

ACCURACY: 4/5/7/10

DAMAGE: 20

POWER: [5]

WEAPONS SKILL: 4

DEFENSIVE SYSTEMS

STARFLEET DEFLECTOR SHIELD

PROTECTION: 48/70

POWER: [48]

DESCRIPTION AND NOTES

FLEET DATA: Direct descendants of the legendary *Constitution*–class ships, *Constellation*–class vessels built and improved on many of their predecessors' most important innovations. Utilizing expanded navigational and lateral sensor templates, as well as a four-nacelle warp drive configuration, the *Constellation* class assumed a leading role in both deep space exploration and long-range perimeter defense during the early 24th century.

Although some of these duties were subsumed by the new *Ambassador*–class vessels when they were launched in 2322, the *Constellation* class remained in many ways the more versatile design. Perhaps the best testament to the class' utility is the fact that many remain in active service today, despite the fact that the class' production life ended nearly twenty years ago.

NOTEWORTHY VESSELS/ SERVICE RECORDS/ ENCOUNTERS: *U.S.S. Constellation*, prototype; *U.S.S. Gettysburg*, former command of Admiral Mark Jameson; *U.S.S. Hathaway*, participated in battle simulation with *Enterprise-D*; *U.S.S. Magellan*, commanded by Captain Conklin; *U.S.S. Stargazer*, former command of Captain Jean–Luc Picard, destroyed in the Battle of Maxia (2355); *U.S.S. Victory*, commanded by Captain Zimbata, posting of Geordi LaForge prior to his service aboard *Enterprise–D*. Also in service: *U.S.S. Antietam*, *U.S.S. Fading Sun*, *U.S.S. Vespucci*.

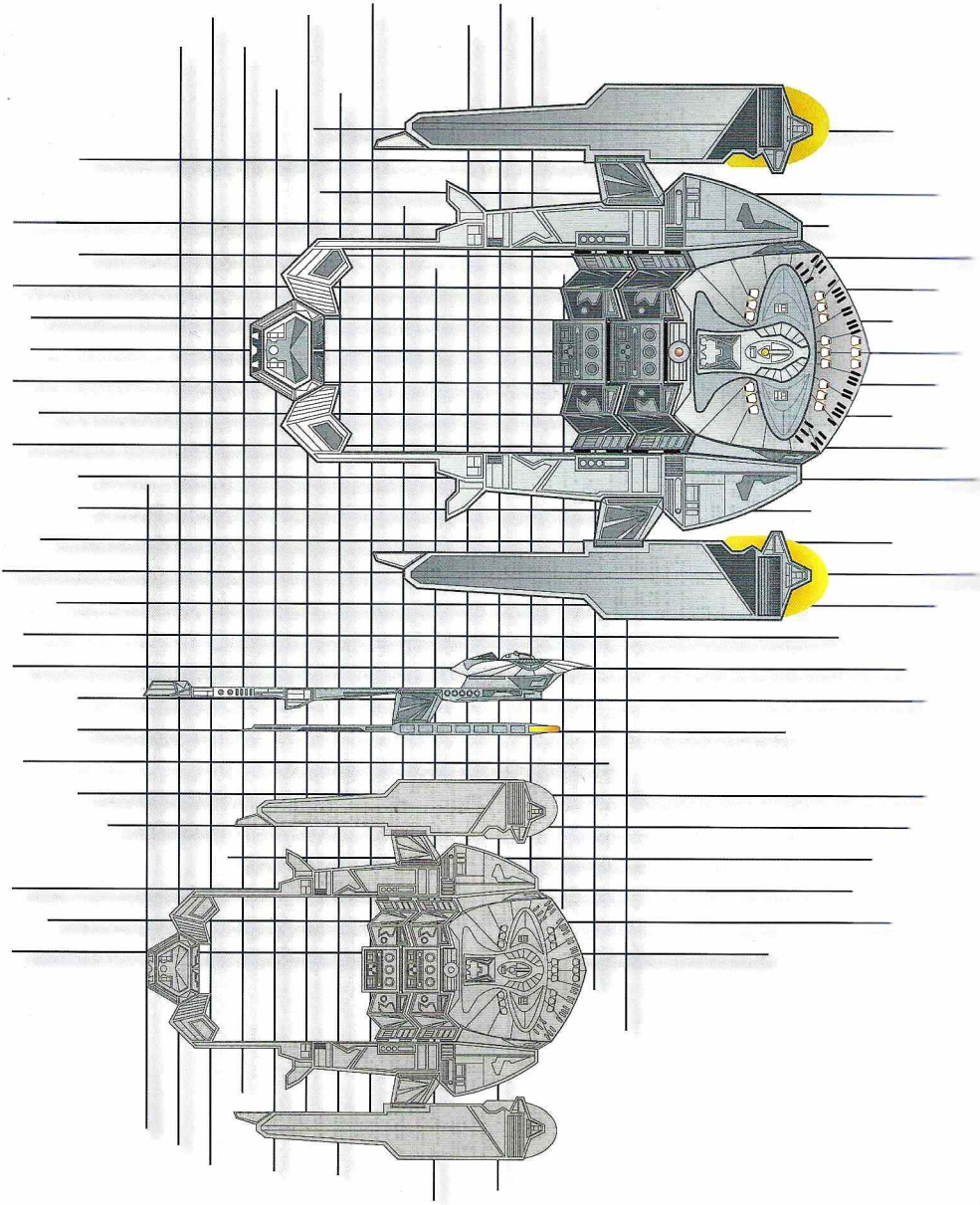

DENEVA–CLASS STARSHIP

CLASS AND TYPE: *DENEVA*–CLASS LIGHT TRANSPORT
COMMISSIONING DATE: 2318
HULL CHARACTERISTICS
SIZE: 4 (210 METERS LONG, 11 DECKS)
RESISTANCE: 2
STRUCTURAL POINTS: 80

OPERATIONS CHARACTERISTICS
CREW/PASSENGERS/EVAC: 90/1100/2000
[6 PWR/ROUND]
COMPUTERS: 3
[3 PWR/ROUND]
TRANSPORTERS: 3 PERSONNEL, 8 CARGO, 3 EMERGENCY
[7 PWR/ROUND]
TRACTOR BEAMS: 1 AD, 1 FV
[2/RATING USED]

PROPULSION AND POWER CHARACTERISTICS
WARP SYSTEM: 5.0/9.0/9.2 (6 HOURS)
[2/WARP FACTOR]
IMPULSE SYSTEM: .5c/.75c
[5/7 PWR/ROUND]
POWER: 110
SENSOR SYSTEMS
LONG-RANGE SENSORS: +1/12 LIGHT-YEARS
[6 PWR/ROUND]
LATERAL SENSORS: +1/1 LIGHT-YEAR
[4 PWR/ROUND]
NAVIGATIONAL SENSORS: +1
[5 PWR/ROUND]
SENSORS SKILL: 4

WEAPONS SYSTEMS
TYPE VI PHASER
RANGE: 10/30,000/100,000/300,000
ARC: ALL (720 DEGREES)
ACCURACY: 5/6/8/11
DAMAGE: 12
POWER: [12]
WEAPONS SKILL: 3

DEFENSIVE SYSTEMS
STARFLEET DEFLECTOR SHIELD
PROTECTION: 30/48
POWER: [30]

DESCRIPTION AND NOTES

FLEET DATA: *Deneva*–class transports are a familiar sight on worlds and at starbases throughout Federation space. One of the most common types of Starfleet transport vessel, the class has been in service since the early 24th century. These ships are used by Starfleet sector commands to transport everything from deuterium to photon warheads.

Its unique modularity accounts for much of the popularity of this versatile design. The main compartments can be configured to accept any of several prefabricated designs, including passenger quarters, standard cargo bays, hydroponic transport modules, security modules, and biological/medical transfer modules. Most starbases have several of each type of module on hand.

NOTEWORTHY VESSELS/ SERVICE RECORDS/ ENCOUNTERS: *U.S.S. Deneva*, prototype; *U.S.S. Arcos*, lost over Turkana IV; *U.S.S. LaSalle*, discovered series of radiation anomalies in the Gamma Arigulon system (2367). Also in service: *U.S.S. Eridani*, *U.S.S. Indi*.

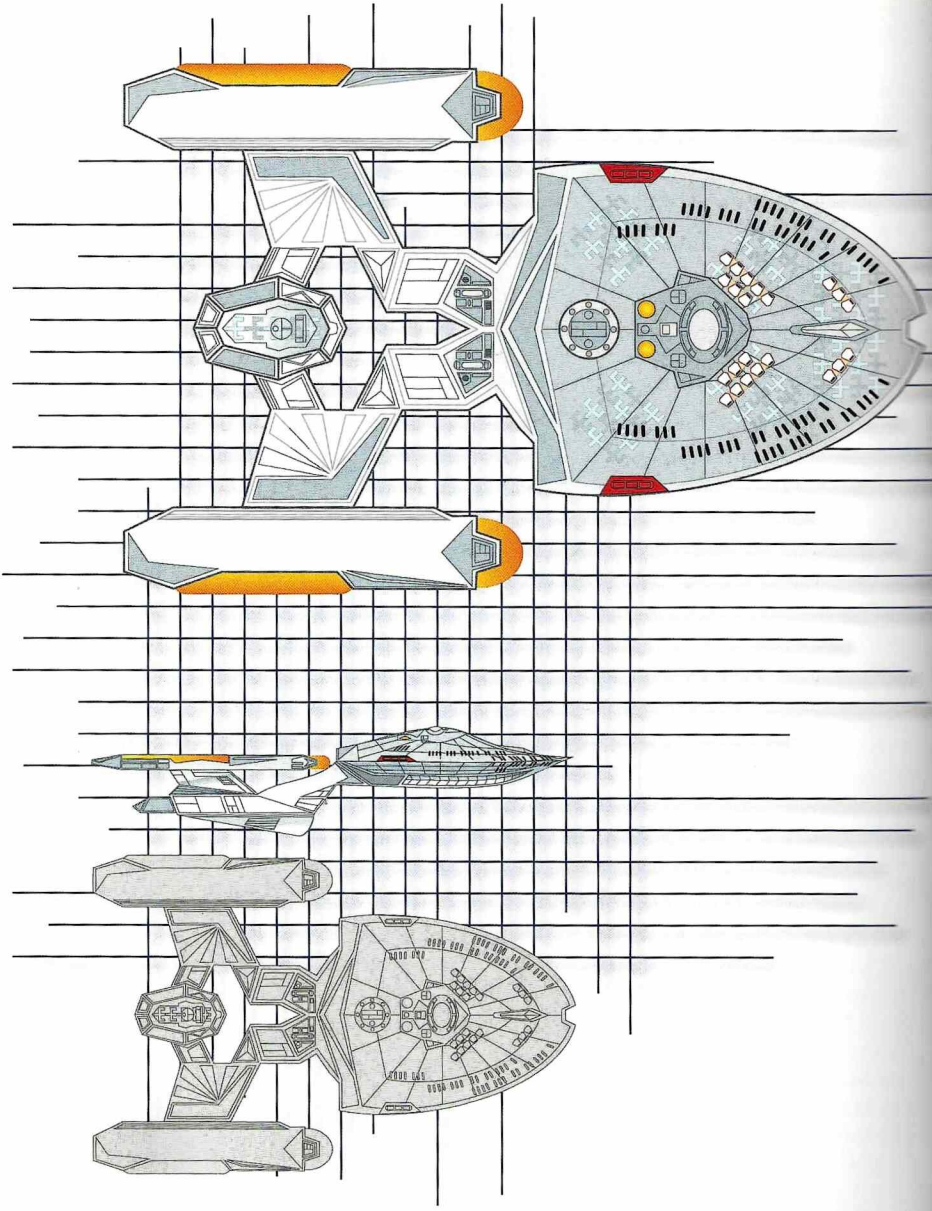

MERCED–CLASS STARSHIP

CLASS AND TYPE: *MERCED*–CLASS LIGHT ESCORT (CORVETTE)

COMMISSIONING DATE: 2312

HULL CHARACTERISTICS

SIZE: 4 (187 METERS LONG, 9 DECKS)

RESISTANCE: 3

STRUCTURAL POINTS: 80

OPERATIONS CHARACTERISTICS

CREW/PASSENGERS/EVAC: 50/150/400
[5 PWR/ROUND]

COMPUTERS: 3
[3 PWR/ROUND]

TRANSPORTERS: 2 PERSONNEL, 2 CARGO, 2 EMERGENCY
[3 PWR/ROUND]

TRACTOR BEAMS: 1 AD, 1 FV
[2/RATING USED]

PROPULSION AND POWER CHARACTERISTICS

WARP SYSTEM: 5.0/9.0/9.2 (12 HOURS)
[2/WARP FACTOR]

IMPULSE SYSTEM: .7c/.9c
[7/9 PWR/ROUND]

POWER: 125

SENSOR SYSTEMS

LONG-RANGE SENSORS: +1/15 LIGHT-YEARS
[6 PWR/ROUND]

LATERAL SENSORS: +1/1 LIGHT-YEAR
[4 PWR/ROUND]

NAVIGATIONAL SENSORS: +1
[5 PWR/ROUND]

SENSORS SKILL: 4

WEAPONS SYSTEMS

TYPE VII PHASER

RANGE: 10/30,000/100,000/300,000

ARC: ALL (720 DEGREES)

ACCURACY: 5/6/8/11

DAMAGE: 14

POWER: [14]

TYPE II PHOTON TORPEDOES

NUMBER: 75

LAUNCHERS: 1 AD, 1 FV,

SPREAD: 4

ARC: FORWARD OR AFT, BUT ARE SELF-GUIDED

RANGE: 15/300,000/1,000,000/3,500,000

ACCURACY: 4/5/7/10

DAMAGE: 20

POWER: [5]

WEAPONS SKILL: 4

DEFENSIVE SYSTEMS

STARFLEET DEFLECTOR SHIELD

PROTECTION: 48/70

POWER: [48]

DESCRIPTION AND NOTES

FLEET DATA: First launched in early 2312, shortly after the Tomed Incident, the *Merced* class of light escorts was part of an aborted development program initiated to combat the growing Romulan threat. Originally intended to serve as support vessels for the proposed Freedom class of strike cruisers, the *Merced* program was discontinued—along with the never-launched *Freedom* project—when the Romulans entered their self-imposed isolation and Starfleet assumed a decidedly less hawkish attitude toward the Star Empire. As a result, the *Merced* class has the curious distinction of having the shortest production lifespan of any vessel in Starfleet history (only sixteen ships were produced over a period of four years).

Despite their limited production life, *Merced* vessels represent prime examples of early 24th-century functional design. Well armed, sleek, and uncompromising, these ships have an unusually short range for Starfleet craft (they were originally designed for fleet escort, troop transport and interdiction duties—most *Merced* mission profiles last less than a year). Because of this, most are attached to starbases and deep space stations as support and defense ships. Others still serve in frontier regions as escorts for newer cruisers and frigates.

NOTEWORTHY VESSELS/ SERVICE RECORDS/ ENCOUNTERS: *U.S.S. Merced*, prototype; *U.S.S. Trieste*, stationed near Starbase 74, former assignment of Cmdr. Data. Also in service: *U.S.S. Calypso, U.S.S. Pumori*.